PRODUCT SUBMITTAL SHEET

Product Type: Drywall Stud

Product Definition: 362S125-15 25EQ

CSI Code: 09.22.16.13

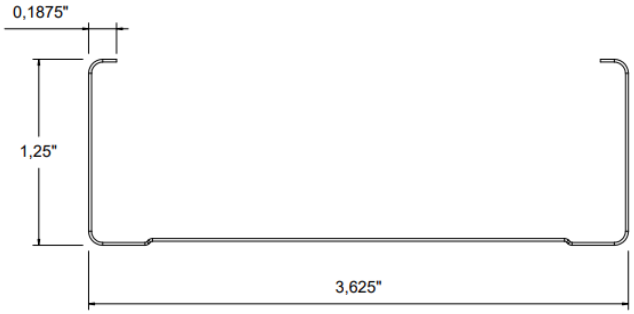

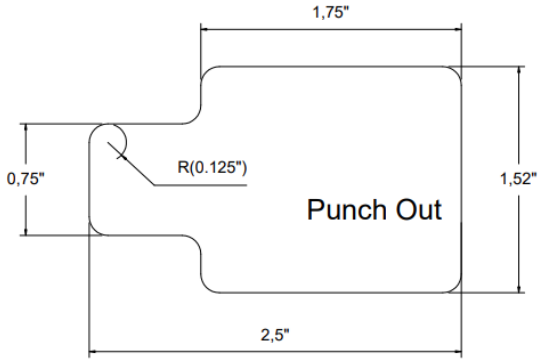

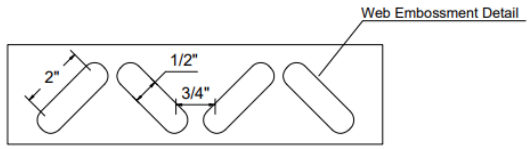

Embossments in web are only placed on sections 2-1/2" and wider.

Profile Properties:

Web Depth	3,625 in	Yield Strength:	50 ksi
Flange Width	1,250 in	Unit Weight	0,32 lb/ft
Stiffening Lip	0,1875 in	Punchout Width / Length	Please see figure
Design Thickness	0,0153 in	Finish	G40
Minimum Thickness	0,0145 in	Color Coding	

Gross Section Properties:

Cross Sectional Area	Agross	0,0947 in2
Moment of Inertia, x-axis	Ix	0,1887 in4
Radius of Gyration, x-axis	rx	1,4119 in
Moment of Inertia, y-axis	Iy	0,0163 in4
Radius of Gyration, y-axis	ry	0,4149 in

Torsional Properties:

St. Venant Torsion Constant	J x 1000	0,0071 in4
Warping Constant	Cw	0,0403 in6
Distance Between Shear Axis and Neutral Axis	x0	-0,7539 in
Polar Radius of Gyration	r0	1,6353 in
Torsional Flexural Constant	β	0,7921
Limit of Unbraced Length	Lu	31,66 in

Effective Section Properties:

Effective Area	Aeff	0,0785 in2
Effective Moment of Inertia for Deflection	Ixe	0,1550 in4
Effective Section Modulus	Sxe	0,0752 in3
Allowable Bending Moment	Ma	1,8957 in.k
Allowable Shear Force	Vag	90 lbs

Codes & Standards:

- Calculations are based on AISI S220-20 and AISI S100-16.
- Complies with IBC2021, ASTM C645, ASTM C754, ASTM A653, ASTM A1003, ASTM E72
- Intertek Certificate of Compliance No: COC-WHI23-37729201
- LEED / Sustainability Credits: Environmental Product Declaration S-P Code: S-P-00869

Limiting Heights, Non Composite (ft-in):

Profile	5 psf			7,5 psf			10 psf		
	L/120	L/240	L/360	L/120	L/240	L/360	L/120	L/240	L/360
12	15' 10''	12' 7''	11' 0''	13' 10''	11' 0''	9' 7''	12' 7''	9' 12''	8' 9''
16	14' 5''	11' 5''	9' 12''	12' 7''	9' 12''	8' 9''	11' 5''	9' 1''	7' 11''
24	12' 7''	9' 12''	8' 9''	11' 0''	8' 9''	7' 8''	9' 0''	7' 11''	6' 11''

- Heights are based on AISI S220-20 and AISI S100-16, using steel properties alone.
- Above listed Non-Composite Limiting Heights are applicable when the unbraced length is less than or equal to Lu. Heights are limited by moment, deflection and shear.

Limiting Heights, Composite – Fully Braced (ft-in):

Profile	5 psf			7,5 psf			10 psf		
	L/120	L/240	L/360	L/120	L/240	L/360	L/120	L/240	L/360
12	21' 6"	17' 1"	14' 11"	18' 4"	14' 11"	13' 0"	15' 10"	13' 7"	11' 10"
16	19' 5"	15' 6"	13' 8"	15' 10"	13' 7"	11' 10"	13' 9"	12' 4"	10' 7"
24	15' 10"	13' 8"	11' 11"	12' 11"	11' 10"	10' 1"	11' 2"	10' 7"	9' 0"

- The composite limiting heights are taken from ASTM C754-20 and based on a single layer of 5/8" Type X gypsum board to each stud flange.
- The gypsum board must be applied full height in the vertical orientation in accordance with ASTM C754 using minimum No. 6 Type S Drywall screws.
- Screws shall be spaced a maximum of 16 in on-center to framing members (including top & bottom track] spaced at 16 in or 12 in on-center.
- Screws shall be spaced a maximum of 12 in on-center to framing members (including top & bottom track] spaced at 24 in on-center.
- No fasteners are required for attaching the stud to the track except as detailed in ASTM C754.
- Stud end bearing must be a minimum of 1 inch.